Important Parts Of Your Da-Lite Screen

(When ordering parts, please specify screen model and size.)

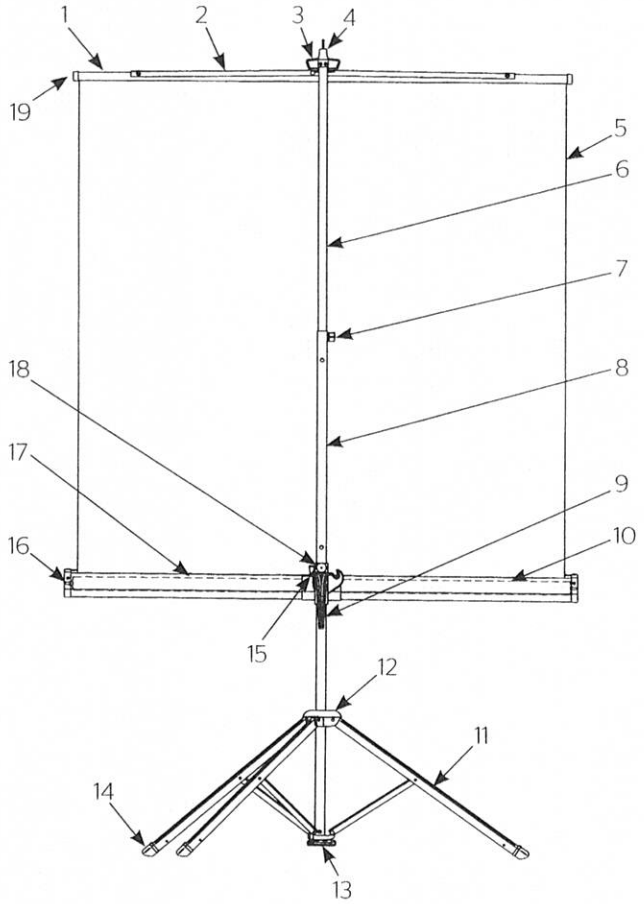

1) Slat
2) Saddle
3) Pull Bail
4) Hanger Hook
5) Picture Surface
6) Extension Tube
7) Black Locking Knob
8) Bottom Tube
9) Handle
10) Roller
11) Tripod
12) Leg Bracket
13) Toe Release & Leg Lock
14) Leg Shoes
15) Fabric Tension Lock Lever
16) End Cap
17) Screen Case
18) Black Locking Knob
19) Slat Caps

Setting Up Your Screen

1. Hold screen vertically with tripod just above floor. With toe, press straight down on toe release plate. Tripod legs will glide open.
2. Pull out Black Locking Knob at top of bottom tube.
3. Raise extension tube to first position, and then swing case to horizontal position.
4. Raise screen surface and pull bail over hanger. If Keystone Eliminator is to be used, (1) simply grasp the knurled tip which protrudes slightly above the hanger; (2) pull straight up; (3) then lay in a horizontal position over the hanger, and place the pull bail on it.
5. Release Black Locking Knob and fabric tension lock lever on handle.
6. Holding extension tube with one hand and releasing Black Locking Knob with other, raise extension tube to desired position.
7. The case position may be changed by pulling out the Black Locking Knob located on the handle.
8. When case at desired position, lock into place by pressing down on the fabric tension lock lever.

Using Screen In Lowest Position

Follow steps 1 through 3 above.

a. Raise locking lever on left side of handle.

b. Release black knob and lower case.

c. Holding bottom tube, raise extension tube until it locks into desired position.

Closing The Screen

1. Return screen case to original central position on center tube.
2. Hold extension tube firmly. Pull out top Black Locking Knob and lower extension tube to bottom position.
3. Unhook screen pull bail and complete re-rolling fabric into case.
4. If Keystone Eliminator has been used, simply raise it to a perpendicular position and push it back into the extension tube.
5. Swing case to vertical position. Note that fabric locks in.
6. Set tab on hanger in opening of case end cap. As extension tube locks, the case also is locked.
7. Place tip of middle finger of right hand in depression beneath leg bracket. Lift leg bracket sharply, at the same time applying a slight lift to entire unit with left hand. **NOTE** that legs are closed and locked, hanger, and extension tube and case are locked and surface is locked to provide for safe and comfortable carrying and storing.

Protect Your Screen

Before re-rolling surface into case, examine both front and back of surface to be sure they are free of foreign matter. A Da-Lite Screen carrying case is a wise and economical investment.

IMPORTANT NOTE:
Use no more tilt than necessary. Use caution in tensioning screen surface when using Keystone Eliminator. Don't over-tension!